MGK METAL JOINT STOCK COMPANY

Lot No. 17, Street No. 8, Tan Tao Industrial Park, Tan Tao A Ward, Binh Tan District,
Ho Chi Minh City, Vietnam Telephone: +84 8 3756 2750
Fax: +84 8 3756 2751 Email: info@mgkmetal.com.vn

AlZnSi Alloy P020

Technical datasheet

Updated: 09/2024

1 2 3

Applications

AlZnSi Alloy P020 is a typical pre-mixed alloy compatible with the continuous galvanizing lines (CGL)

1 2 3

Characteristics

Chemical composition	Value (Wt.%)
Al	55 ± 2
Si	1.50 ± 0.20
Fe	≤ 0.20
Pb	≤ 0.01
Sn	≤ 0.01
Zn	Balance
Others	Each below 0.015
Physical properties	**Value**
Density (g/cm^3) at 25°C	3.7
Melting temperature (^{o}C)	580 – 600

Notes: Product can be manufactured according to customer's composition requirements
The sampling and analyses comply strictly with ASTM E716-94 and E1251-94 Standard

1 2 3

Packaging

Packaging	Single
Size	Jumbo
Net weight	1100 ± 100 kg
Dimensions (L x W x H)	1790 x 730 x 360 (± 30 mm)
Shape	As illustrating image

MGK METAL JOINT STOCK COMPANY

Lot No. 17, Street No. 8, Tan Tao Industrial Park, Tan Tao A Ward, Binh Tan District,
Ho Chi Minh City, Vietnam Telephone: +84 8 3756 2750
Fax: +84 8 3756 2751 Email: info@mgkmetal.com.vn

AlZnSi Alloy P020 Size: Jumbo	Nominal mass: 1100 kg Nominal dimensions: 1790 x 730 x 360 mm

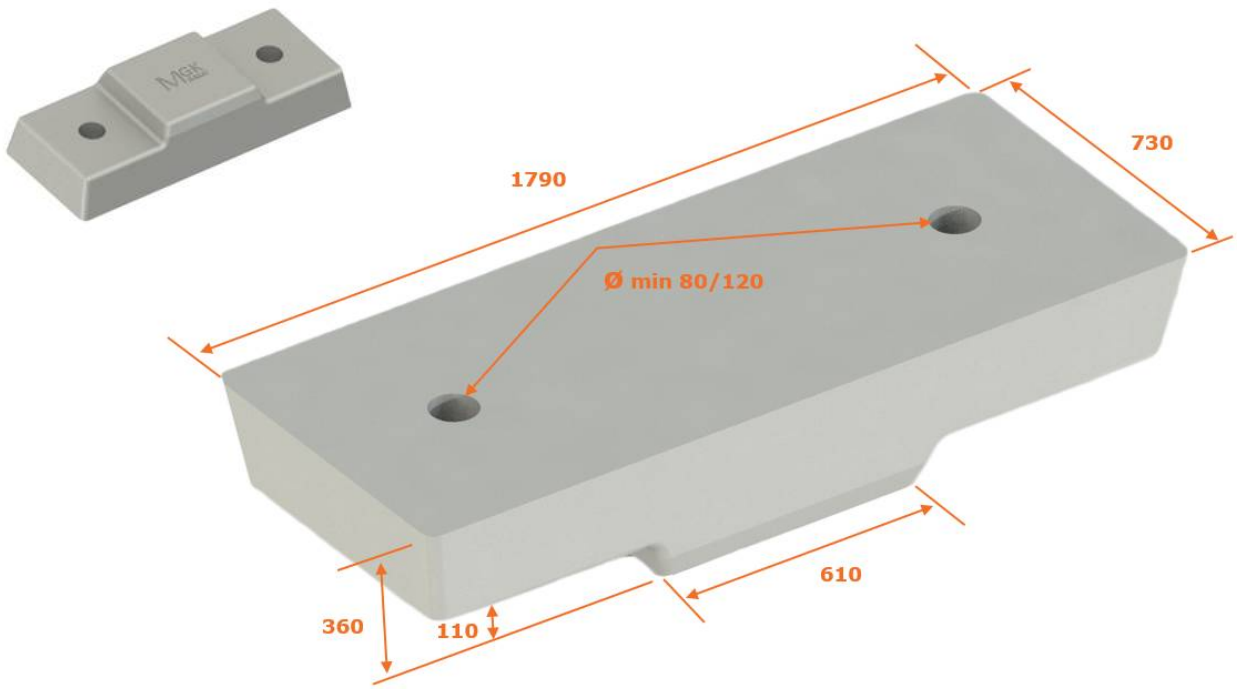

Illustration image